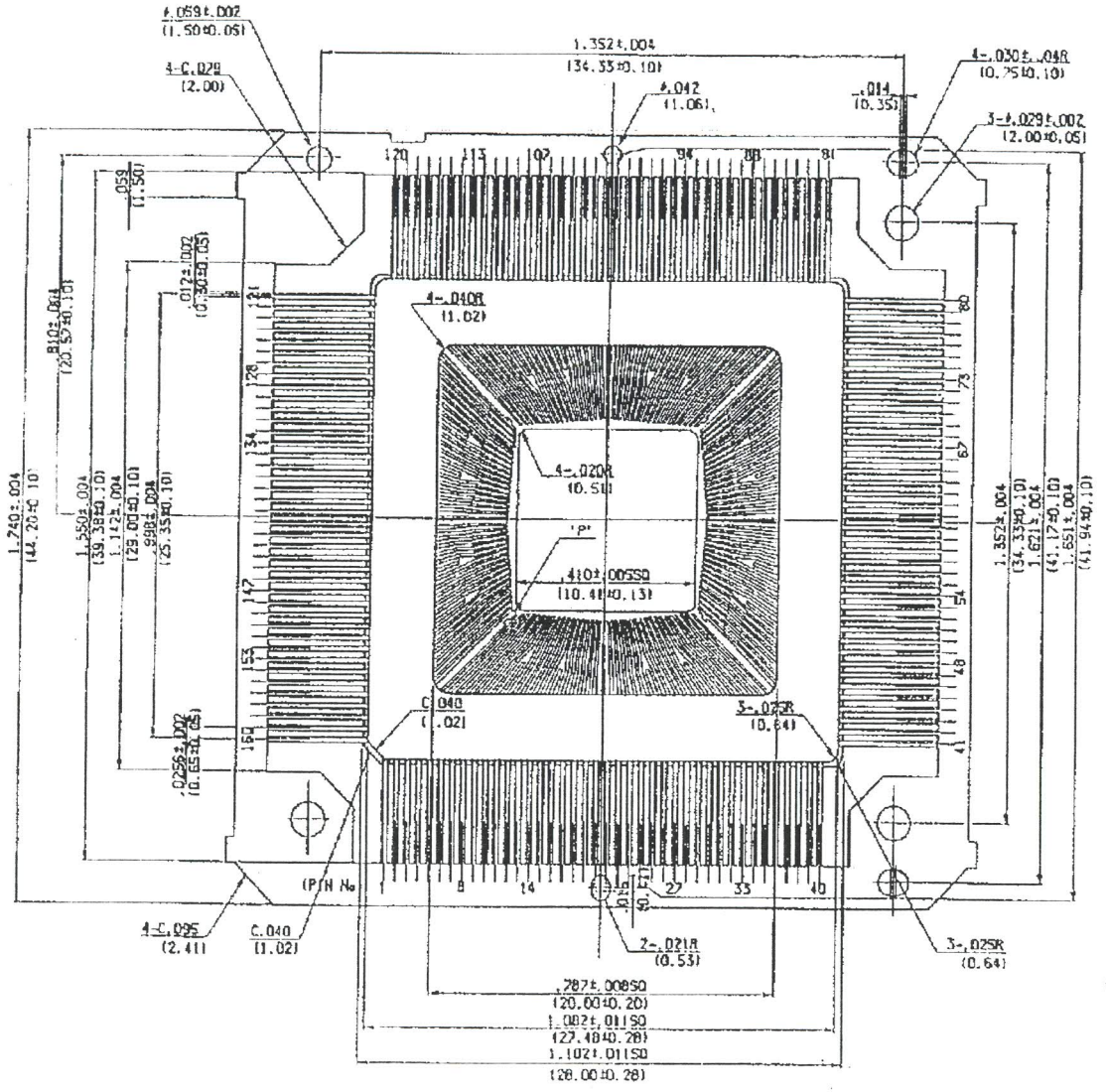

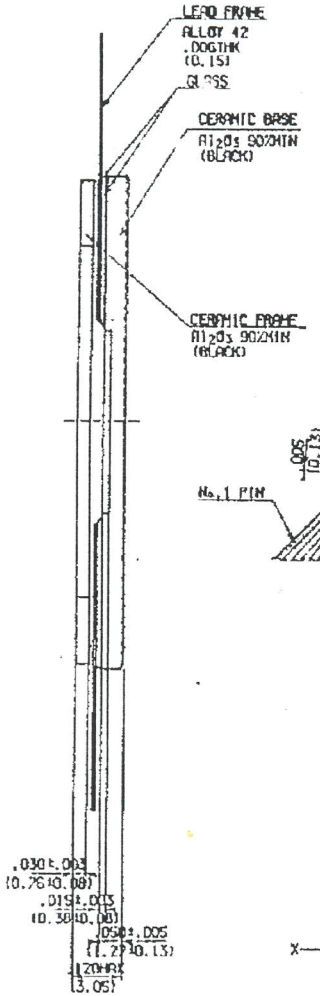

No	ANGLE	No	ANGLE
1	0.644°	19	24.826°
2	2.115°	20	25.952°
3	3.401°	21	27.104°
4	4.865°	22	28.391°
5	6.153°	23	29.518°
6	7.614°	24	30.779°
7	8.887°	25	31.876°
8	10.328°	26	33.106°
9	11.591°	27	34.178°
10	13.026°	28	35.374°
11	14.274°	29	36.410°
12	15.697°	30	37.575°
13	16.924°	31	38.586°
14	18.319°	32	39.717°
15	19.539°	33	40.694°
16	20.911°	34	41.793°
17	22.110°	35	42.740°
18	23.461°	36	43.799°

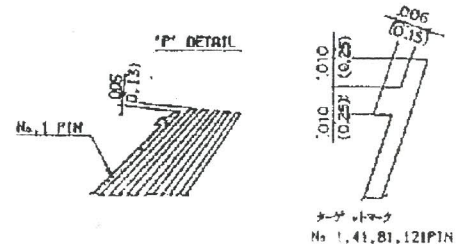

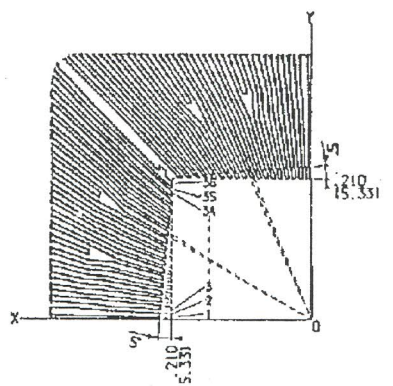

						NAME	TOLERANCES:	DRAWN	CHECKED
						160LD QUAD K-PACK(1102-410)	UNLESS OTHERWISE SPECIFIED		
						SCALE	MATERIAL	APPROVED	DATE
						5 1/1			SEP. 09' 88
	CHANGE	DATE	DRAWN	CHECKED	APPROVED	KYOCERA CORPORATION	KYOTO JAPAN	DWG No.	QC-160311-W