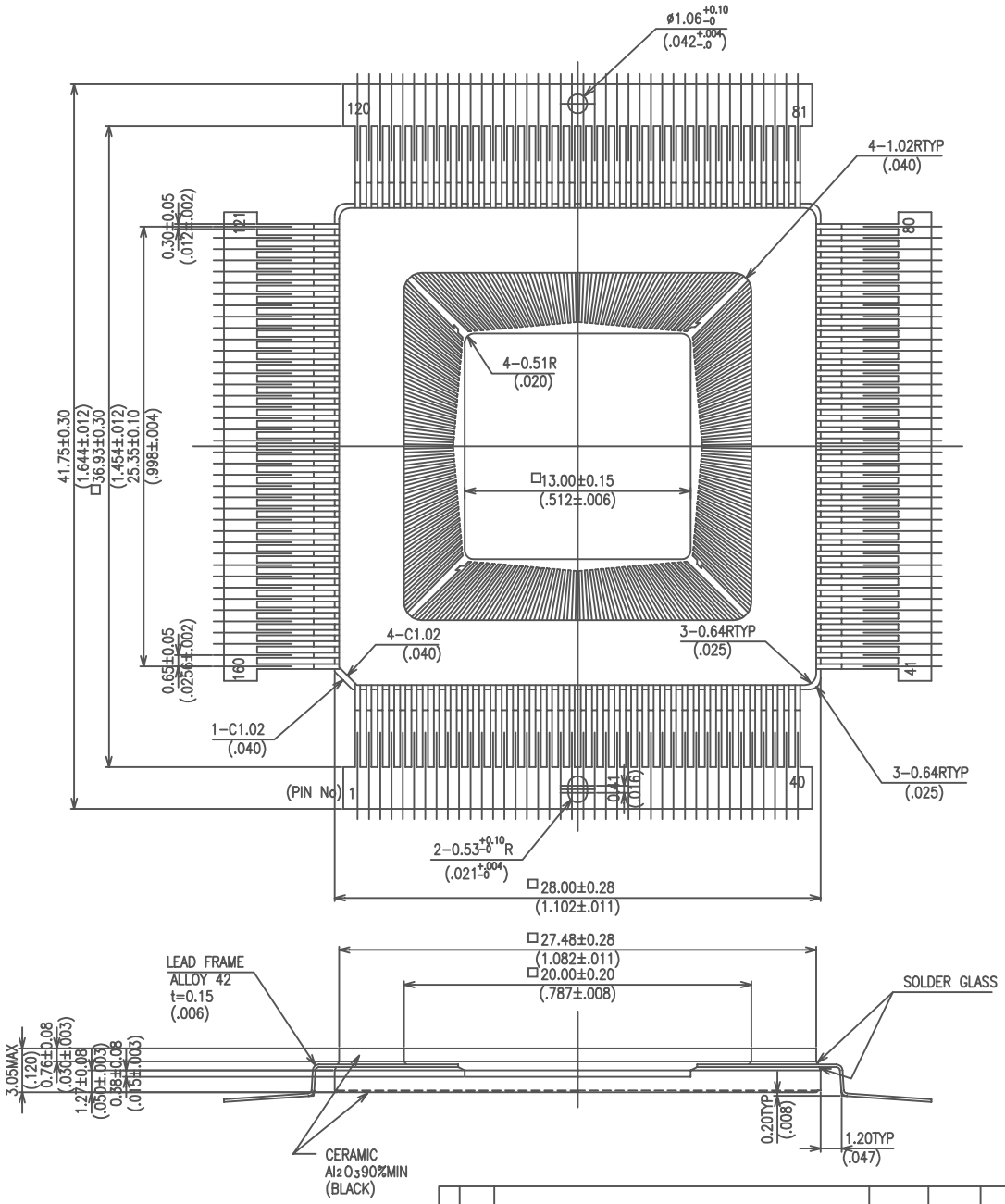

No.	X or Y	No.	X or Y
1	0.075 (.003)	21	2.995 (.118)
2	0.208 (.008)	22	3.142 (.124)
3	0.358 (.014)	23	3.308 (.130)
4	0.491 (.019)	24	3.458 (.138)
5	0.642 (.025)	25	3.627 (.143)
6	0.775 (.031)	26	3.780 (.149)
7	0.926 (.038)	27	3.953 (.156)
8	1.061 (.042)	28	4.109 (.162)
9	1.213 (.048)	29	4.286 (.169)
10	1.348 (.053)	30	4.446 (.175)
11	1.501 (.059)	31	4.627 (.182)
12	1.638 (.064)	32	4.791 (.189)
13	1.792 (.071)	33	4.977 (.196)
14	1.930 (.076)	34	5.145 (.203)
15	2.087 (.082)	35	5.336 (.210)
16	2.227 (.088)	36	5.508 (.217)
17	2.385 (.094)	37	5.705 (.225)
18	2.527 (.099)	38	5.881 (.232)
19	2.688 (.106)	39	6.084 (.240)
20	2.832 (.111)	40	6.266 (.247)

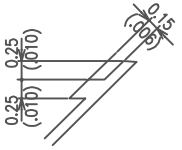

TARGET MARK
No.1,41,81,121PIN

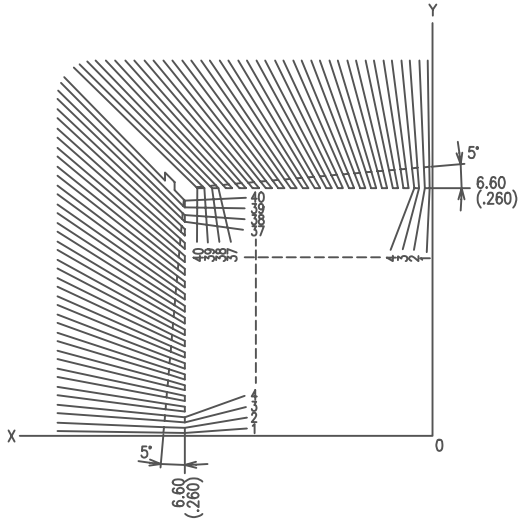

MODIFICATIONS						
		CHANGE	DATE	DRAWN	CHECKED	APPROVED

NAME
160LD QUAD K-PACK'Z'(13.0SQ)

SCALE 5 : 1

MATERIAL ——

TOLERANCES:
UNLESS OTHERWISE SPECIFIED

DRAWN | CHECKED | APPROVED | DATE JUN.09'87

KYOCERA CORPORATION KYOTO JAPAN

DWG No. QC-160305-WZ