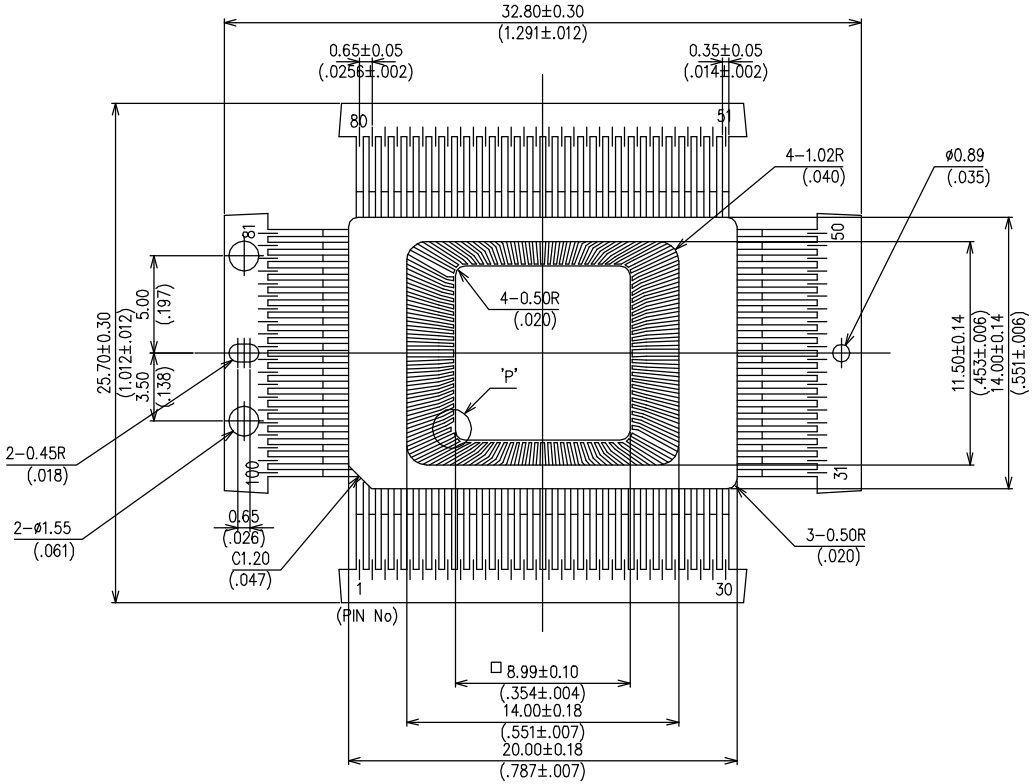

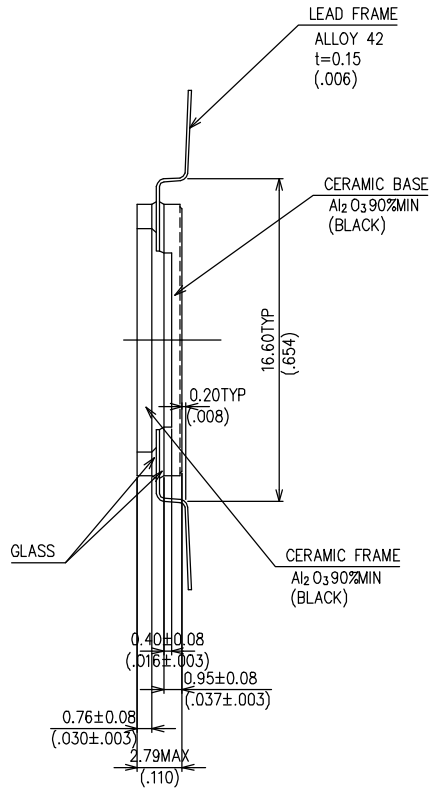

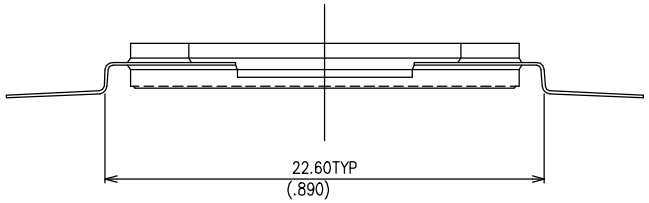

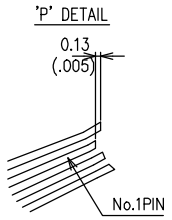

No.1PIN INDEX

MODIFICATIONS	CHANGE	DATE	DRAWN	CHECKED	APPROVED

NAME: 100LD QUAD K−PACK'Z'(8.99SQ)ID

SCALE: 5 : 1

MATERIAL: ——

TOLERANCES: UNLESS OTHERWISE SPECIFIED

DRAWN: K.O

CHECKED:

APPROVED:

DATE: MAY.25'89

KYOCERA CORPORATION KYOTO JAPAN

DWG No. QC−100345−WZ