SHALLOW

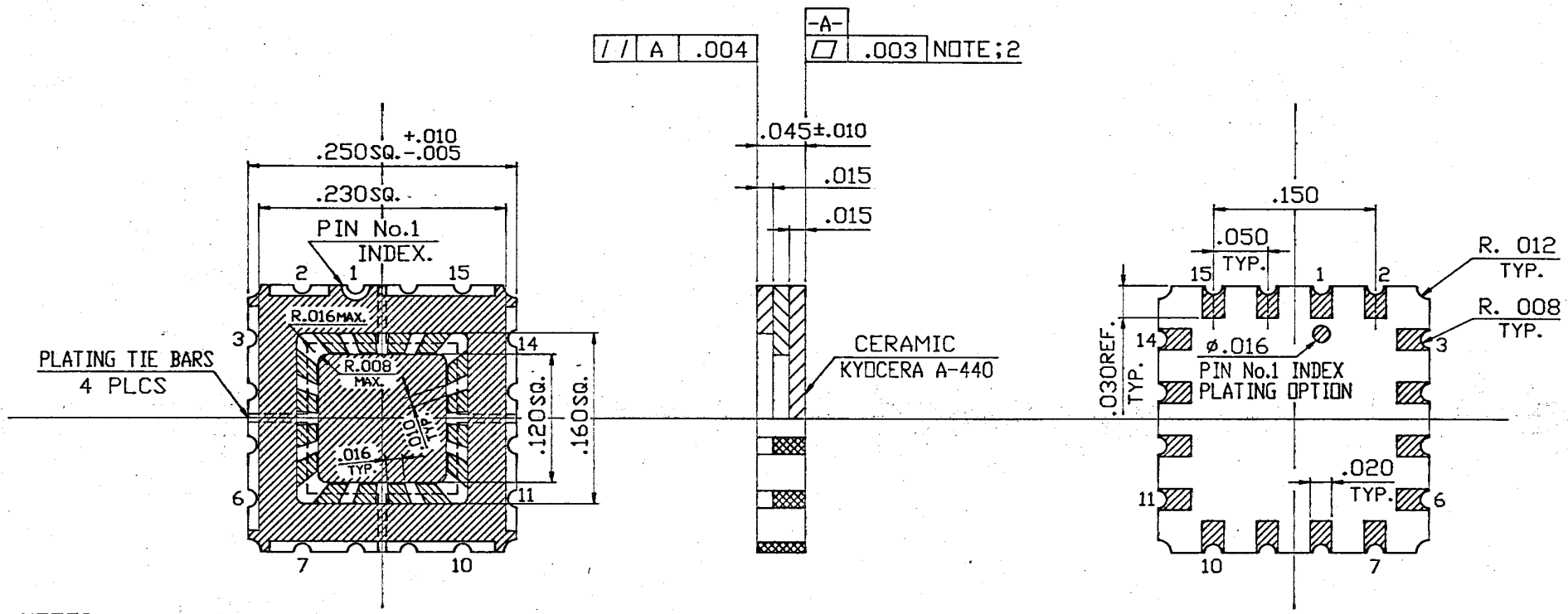

NOTES;

1. ALL EXPOSED METALLIZED AREA SHALL BE GOLD PLATED 60 MICRO INCHES MIN. THICKNESS OVER NICKEL PLATED.
2. FLATNESS PERTAINS TO METALLIZED PADS ONLY.
3. LEAD TO LEAD LEAKAGE MUST NOT EXCEED 5 NANO AMPS AT 100V D.C.
4. LEAD RESISTANCE ; 0.3Ω MAX.

A

	OPTION
01	WITH SEAL METALLIZATION
02	WITHOUT SEAL METALLIZATION

DE-16C #0

MODIFICATIONS				
A ADD : OPTION TABLE	7-19-'77	S.T	E.H	
CHANGE	DATE	DRAWN	CHECKED	APPROVED

NAME 16 LCC (.120 SQ. CAV.)

SCALE 10/1

MATERIAL AS INDICATED

TOLERANCES UNLESS OTHERWISE SPECIFIED ±.005 THIRD ANGLE PROJECTION

DRAWN	CHECKED	APPROVED	DATE
S.T	E.H	S.K	8-27-'76

KYOCERA

KYOCERA CORPORATION KYOTO JAPAN

DRAWING NO. PB-60962-A

SHEET /