VE	R
KYOCERA	[illegible]

REV. NO.	REVISIONS	DATE	APP'D.
—	INIT PER SCN #5727	4/7/89	S. Alper
A	INIT PER SCN# 7127	02/06/90	S. Alper
B	CHANGED PER SCN# 10192	09/23/91	[illegible]

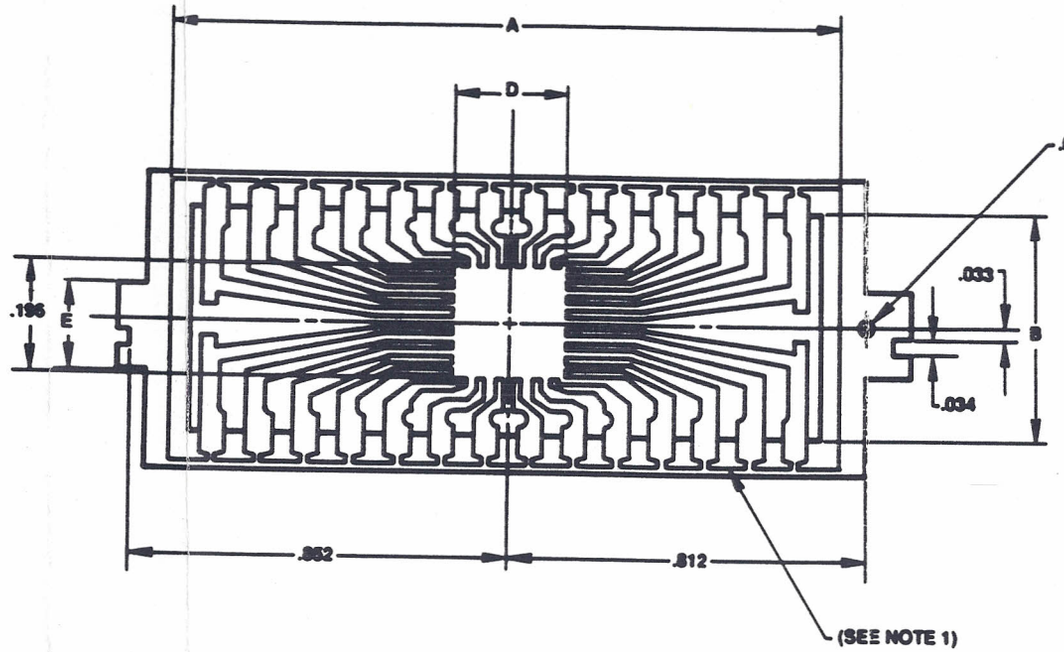

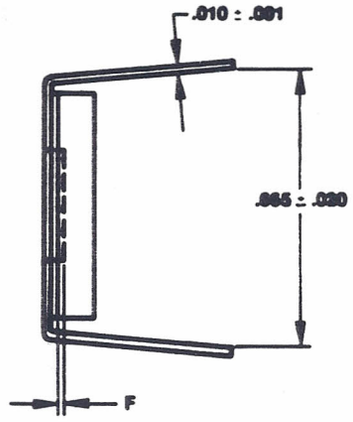

UICC
OCT 10 1991
CONTROLLED COPY

	1.450	.577	.075	.250	.250	.015
CERAMIC NUMBER	A±.010	B±.005	C +.005/-.000	D±.004	E±.004	F±.003
	OUTSIDE DIM			CAVITY DIM		

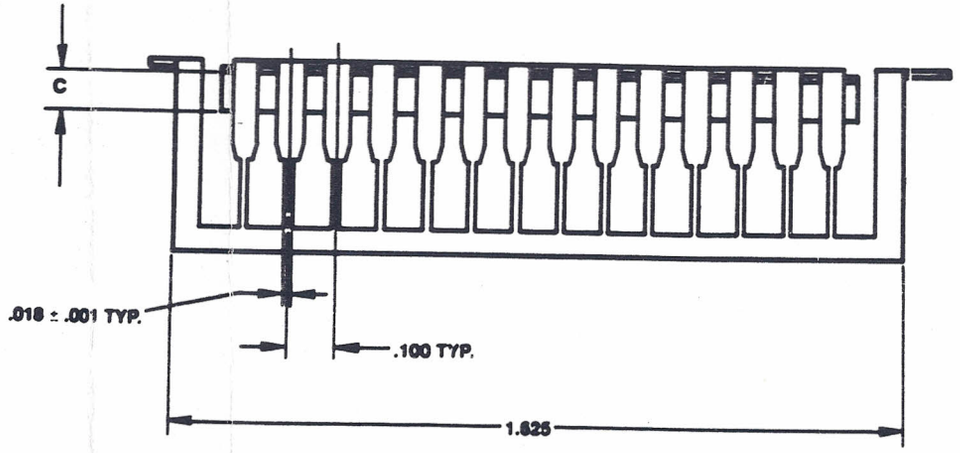

NOTES:
1. ALUMINUM PLATING SHALL BE 200-500µ IN. ALUMINUM
2. KYOCERA LEADFRAME NUMBER - 03-001
3. KYOCERA BASE - BBF-02806

UNLESS OTHERWISE SPECIFIED ALL DIMENSIONS ARE IN INCHES

MATERIAL CERAMIC 90% BLACK ALUMINA CAVITY: GOLD 50µ IN. MIN. SOLDER GLASS: KC-1M LEAD FRAME: ALLOY -42 OR KOVAR	DRAWN / DATE APP'D. S. Alper / DATE 5/7/91 TOLERANCES (U.O.S.) .XX ± .01 .XXX ± .005	UNITRODE INTEGRATED CIRCUIT CORP MORRISVILLE, PA
FINISH	FRACTIONS ± 1/64 ANGLES ± 1/2° SURFACE QUALITY ✓	TITLE 28 LEAD FRAME ON BASE ASSEMBLY DWG NO. MB-2076
DO NOT SCALE THIS DWG		SCALE / SHEET OF

BRUNING 40-22 55435
SF-0019