ZONE	REV.	REVISIONS DESCRIPTION	DATE	APPROVED

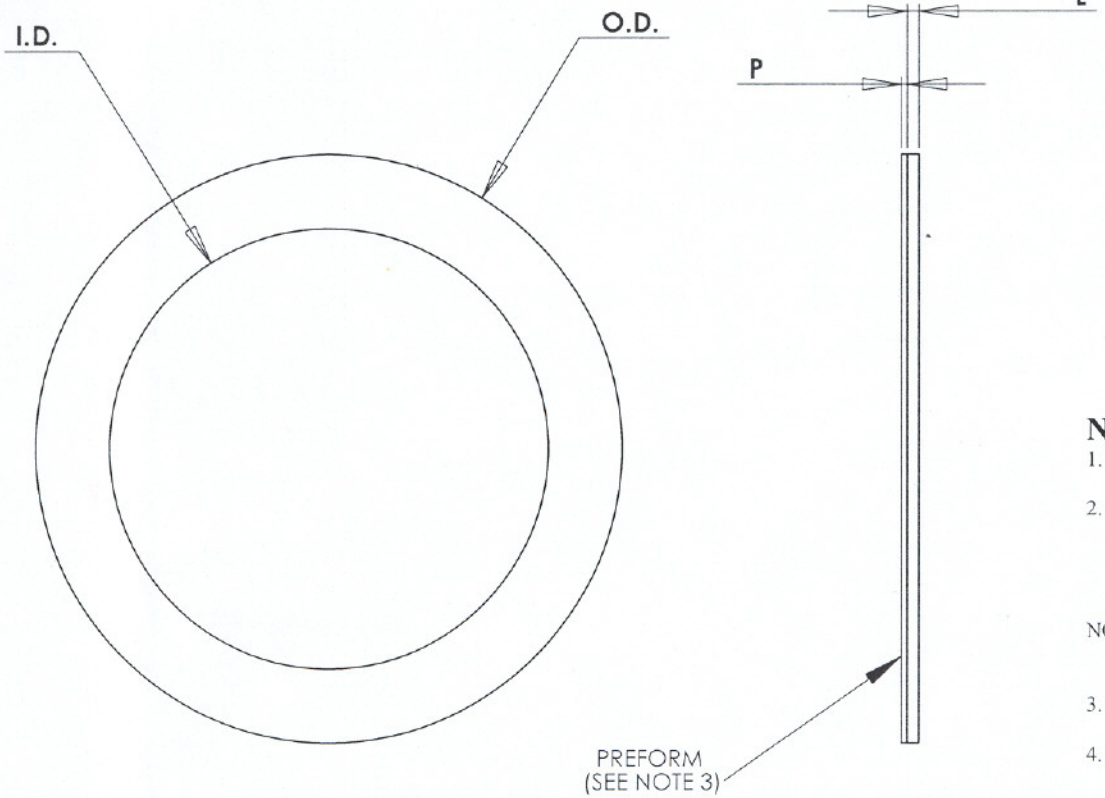

DWG # 40510A		
DIMENSION		TOLERANCE
O.D.	.070	+/-.003
I.D.	N/A	+/-.003
L	.007	+/-.001
P	.002	+/-.0003
TOOL #		LCL070D

NOTES:

1. LID MATERIAL:KOVAR

2. PLATING:
   1st LAYER: 50/350 micro inches Ni

   2nd LAYER: 50 MIN micro inches Au

NOTE: Total Au layer 50 to 225 micro inches
Total Ni layer not to exceed 450 micro inches

3. PREFORM: 80+/- 1% Au 20% Sn

4. FLATNESS: ONE MI (.001) MAX. PER ½" T.I.R.

Chelsea Technology, Inc.

PROPRIETARY AND CONFIDENTIAL
THE INFORMATION CONTAINED IN THIS DRAWING IS THE SOLE PROPERTY OF WILLIAMS ADVANCED MATERIALS. ANY REPRODUCTION IN PART OR AS A WHOLE WITHOUT THE WRITTEN PERMISSION OF WILLIAMS ADVANCED MATERIALS IS PROHIBITED.

NEXT ASSY	USED ON
APPLICATION	

UNLESS OTHERWISE SPECIFIED:
DIMENSIONS ARE IN INCHES
TOLERANCES:
FRACTIONAL± 1/32
ANGULAR: MACH± 1 Degree
TWO PLACE DECIMAL ± .015
THREE PLACE DECIMAL ± .005
MATERIAL --
FINISH --
DO NOT SCALE DRAWING

	NAME	DATE
DRAWN	F.S.	
CHECKED	M.D.	
ENG APPR.	M.D.	
MFG APPR.	F.S.	
Q.A.	M.D.	

COMMENTS:

Williams ADVANCED MATERIALS

ROUND FRAME/LID ASSEMBLY

SIZE A | DWG. DWG # 40510A | REV.

SCALE:2:1 | ENGINEERING DEPT | SHEET 1 OF 1