NTK TECHNICAL CERAMICS

LATEST REVISION'S DESCRIPTION	
A	CORRECT NTK P/N IPK48F0-1124B TO IPK48F1-1124B

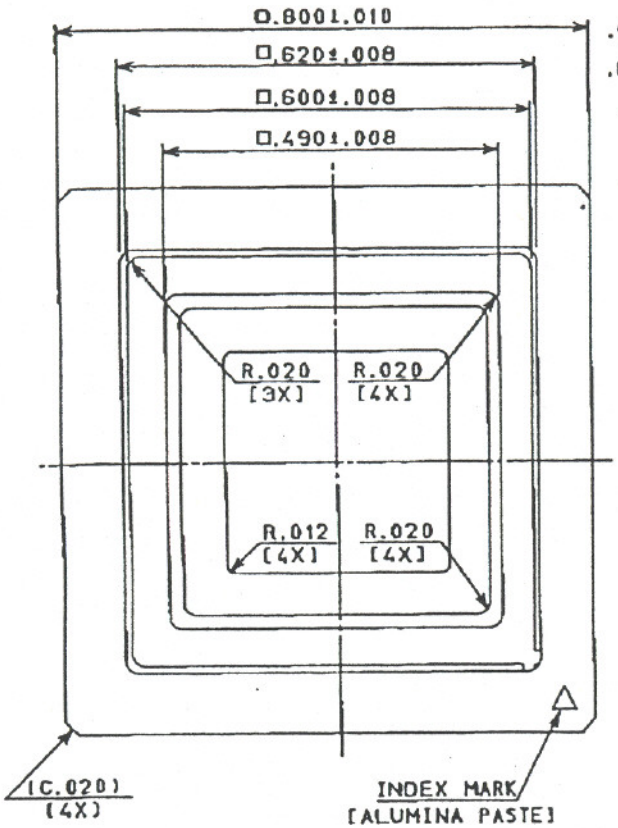

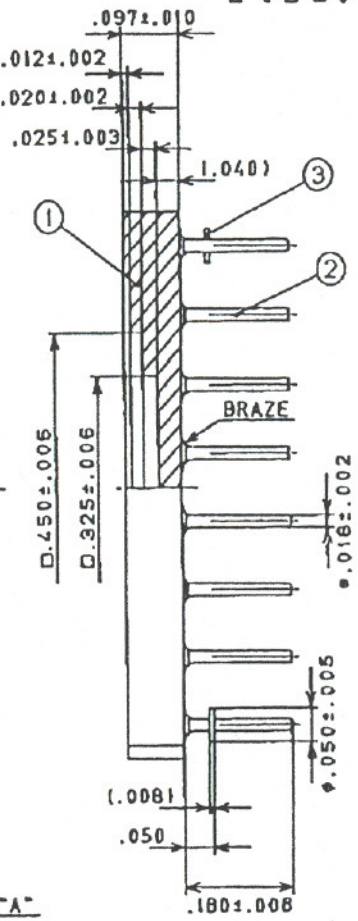

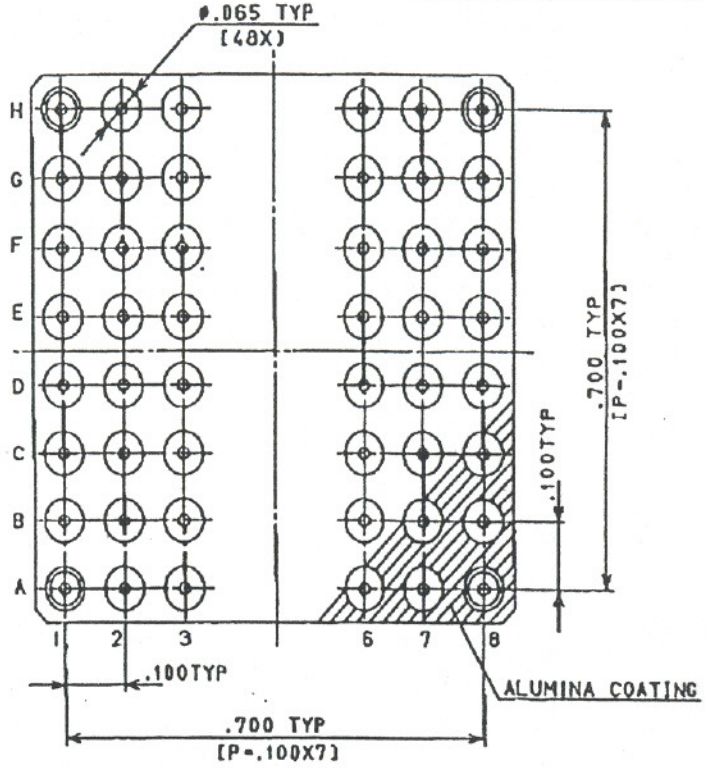

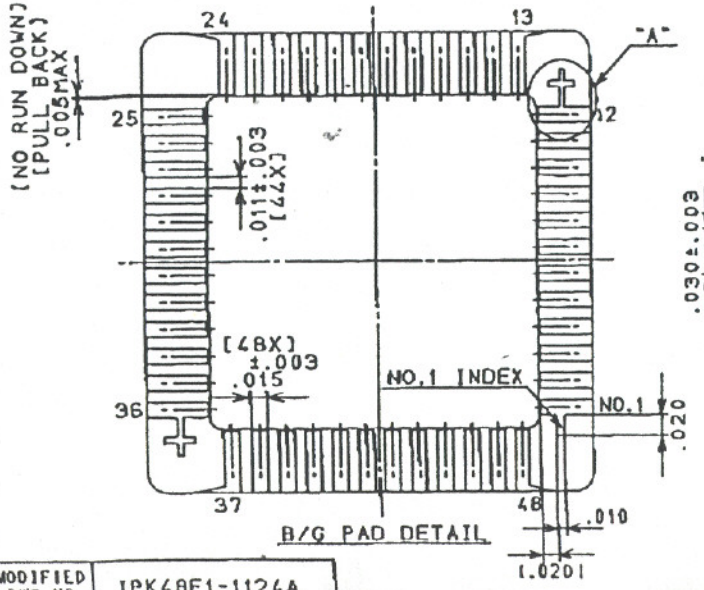

B/G PAD DETAIL

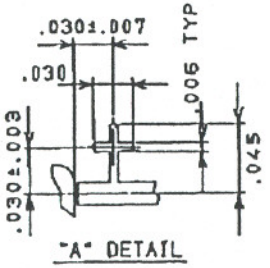

"A" DETAIL

NOTES:

1. GOLD PLATES 60μ INCHES MIN OVER 80μ INCHES MIN NICKEL.
2. NO LEAD TO BE ELECTRICALLY CONNECTED TO THE DIE ATTACH PAD. SEAL RING ISOLATED.
3. LEAD RESISTANCE----------500 mΩ MAX.

CONNECTION TABLE

PAD	PIN	PAD	PIN	PAD	PIN
1	C2	17	H2	33	C8
2	C3	18	G3	34	D6
3	D3	19	G6	35	C6
4	C1	20	H7	36	C7
5	D2	21	H6	37	B7
6	D1	22	H8	38	B8
7	E1	23	G8	39	A8
8	E2	24	G7	40	A6
9	F1	25	F7	41	A7
10	E3	26	F6	42	B6
11	F3	27	E6	43	B3
12	F2	28	F8	44	A2
13	G2	29	E7	45	A3
14	G1	30	E8	46	A1
15	H1	31	D8	47	B1
16	H3	32	D7	48	B2

Item	Name	Material	Description
3	STAND OFF PIN	KOVAR	
2	PIN	KOVAR	
1	CERAMIC	BLACK ALUMINA	

Rev.	Description	Date
A	REDRAWING	JUL-18-1995
ø	NEW DRAWING	JUL-06-1995

UNLESS OTHERWISE SPECIFIED TOLERANCES: ± 1% N.L.T. DECIMALS .XX ±.01 DECIMALS .XXX ±.005

DRAWN K. Yamanouchi

CHECKED

APPROVED

UNIT INCH

SCALE /

CUSTOMER [redacted]

DWG NO. —

NTK TECHNICAL CERAMICS NGK SPARK PLUG CO., LTD

TITLE 48 PIN GRID ARRAY

DWG NO. IPK48F1-1124B SIZE A-2 (C)

MODIFIED DWG NO. IPK48F1-1124A