NTK TECHNICAL CERAMICS

| LATEST REVISION'S DISCRIPTION | |
|---|---|
| C | CHG O.D TOLERANCE 0.950±.010 TO 0.950±.006<br>CHG NTK P/N -2252B TO -2252BA<br>DEL NTK P/N -2252A<br>CHG CUSTOMER THS TO TCS |

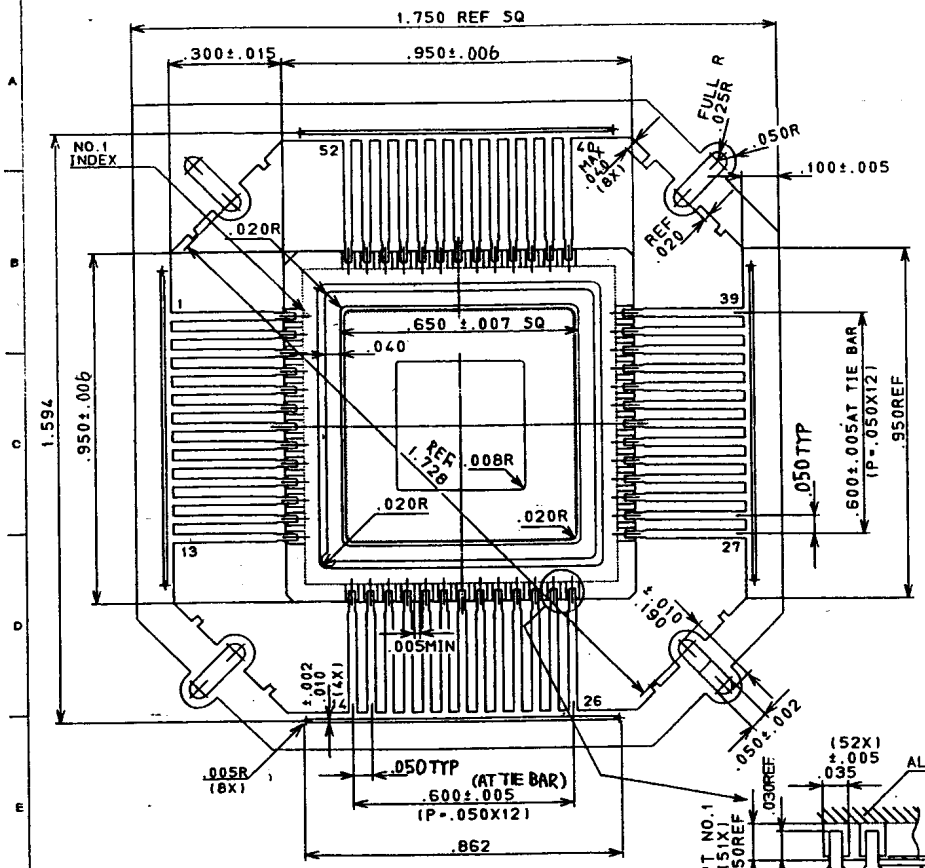


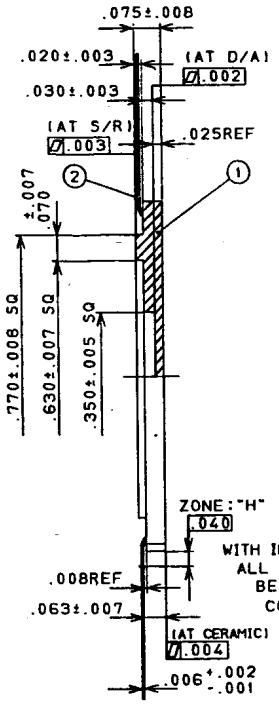


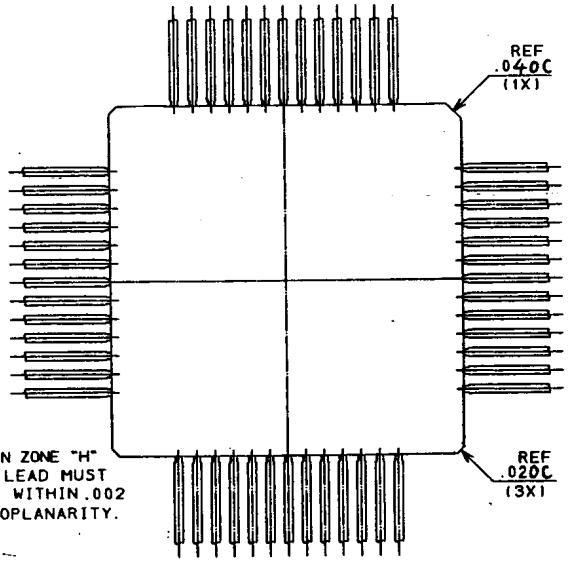


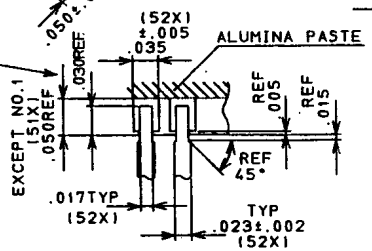


NOTES:
1. GOLD PLATE 100~225μ INCHES OVER 80~250μ INCHES NICKEL.
2. LEAD RESISTANCE -----500mΩ MAX.
3. NO LEAD TO BE ELECTRICALLY CONNECTED TO THE DIE ATTACH PAD. SEAL RING ISOLATED.

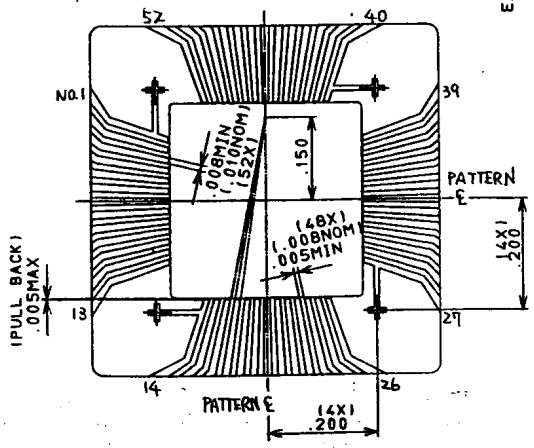


B/G PADS DETAIL

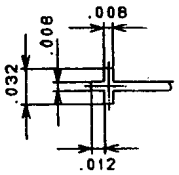


TARGET MARK DETAIL (4X)

OPEN-TOOL

引換 7.8.25 半導体セラミック事業部 技術部

| Item | Name | Material | Description |
|---|---|---|---|
| 3 | | | |
| 2 | LEAD | ALLOY42 | |
| 1 | CERAMIC | BLACK ALUMINA | |

| Rev. | Description | Date |
|---|---|---|
| C | RE DRAWING | MAY-9-1995 |
| B | RE DRAWING | 3-10-92 |
| A | RE DRAWING | OCT-3-91 |
| ● | NEW DRAWING | SEP.-24-1991 |

UNLESS OTHERWISE SPECIFIED TOLERANCES: ± 1%
N. L. T. 2 DECIMALS .XX ±.01
3 DECIMALS .XXX ±.005

DRAWN K.FUJIKAWA
CHECKED
APPROVED
UNIT INCH
SCALE

NTK TECHNICAL CERAMICS
NGK SPARK PLUG CO., LTD

TITLE 52 PIN F/P

DWG NO. IFK52F1-2252BA

SIZE A-2 (C)

MODIFIED DWG No. IFK52F1-2122A

PART No.

SHEET OF

M·H