NTK

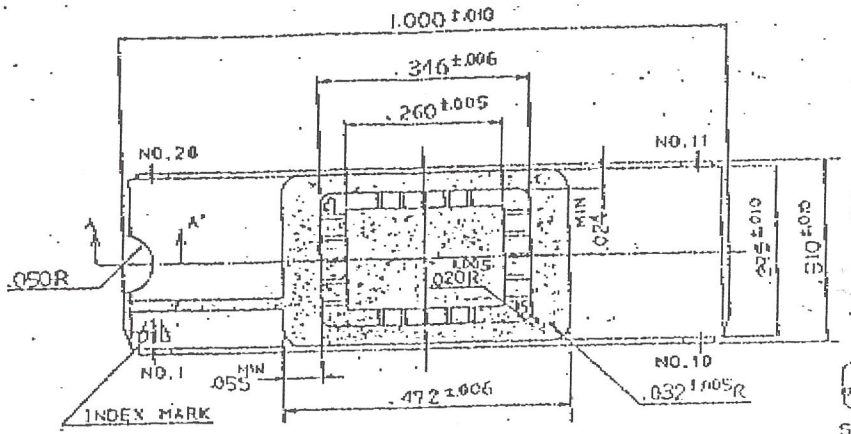

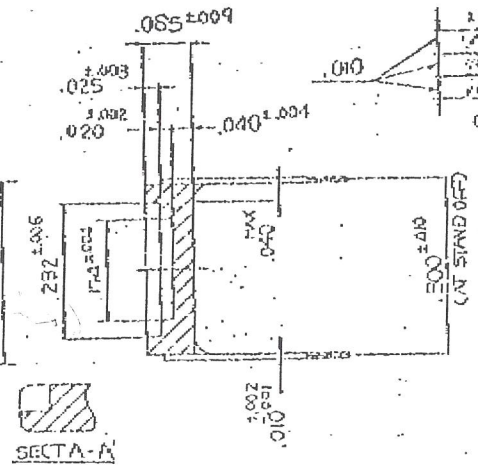

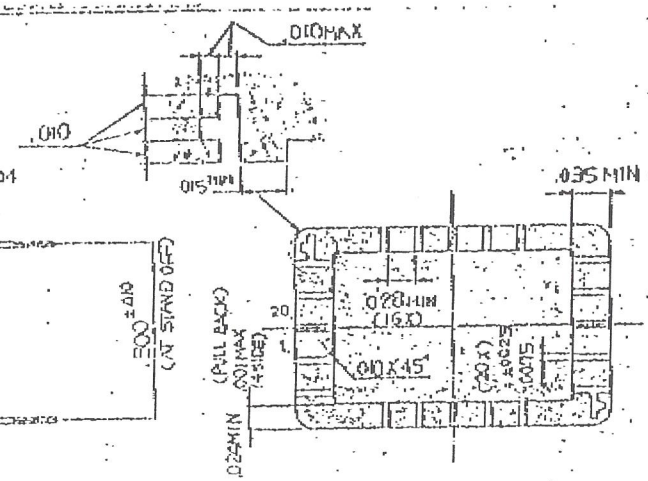

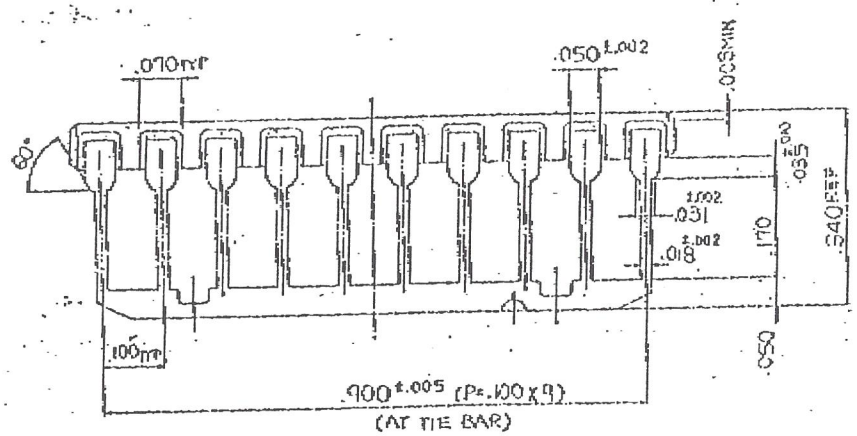

NOTES: 1. GOLD PLAT 60μ INCHES MIN OVER 80μ INCHES MIN NICKEL.

2. NO LEAD TO BE ELECTRICALLY CONNECTED TO THE DIE ATTACH PAD. SEAL RING ISOLATED.

DRAWING FOR APPROVAL

APPROVED BY

NTK TECHNICAL CERAMIC DIVISION

Item	Name	Material	Description
	LEAD	ALLOY 42	
	CERAMIC	BLACK ALUMINA	

Rev.	Description	Date
Ø	NEW DRAWING	AUG. 3-'85

UNLESS OTHERWISE SPECIFIED TOLERANCES: ± 1%
N. L. T. 2 DECIMALS .XX ±.01
3 DECIMALS .XXX ±.005

CUSTOMER

DWG NO. 211204-001 REV. 2

DRAWN Y. Kache

CHECKED

APPROVED Y. Boo

UNIT INCH

SCALE 5 X

NTK TECHNICAL CERAMICS
NGK SPARK PLUG CO., LTD

TITLE "LK"
20 LEAD S/B PKG.

DWG NO. IDK20FI-618A

SIZE A-3

NTK TECHNICAL CERAMICS NGK SPARK PLUG CO. LTD. APR 5 1985