REVISIONS				
ZONE	REV.	DESCRIPTION	DATE	APPROVED

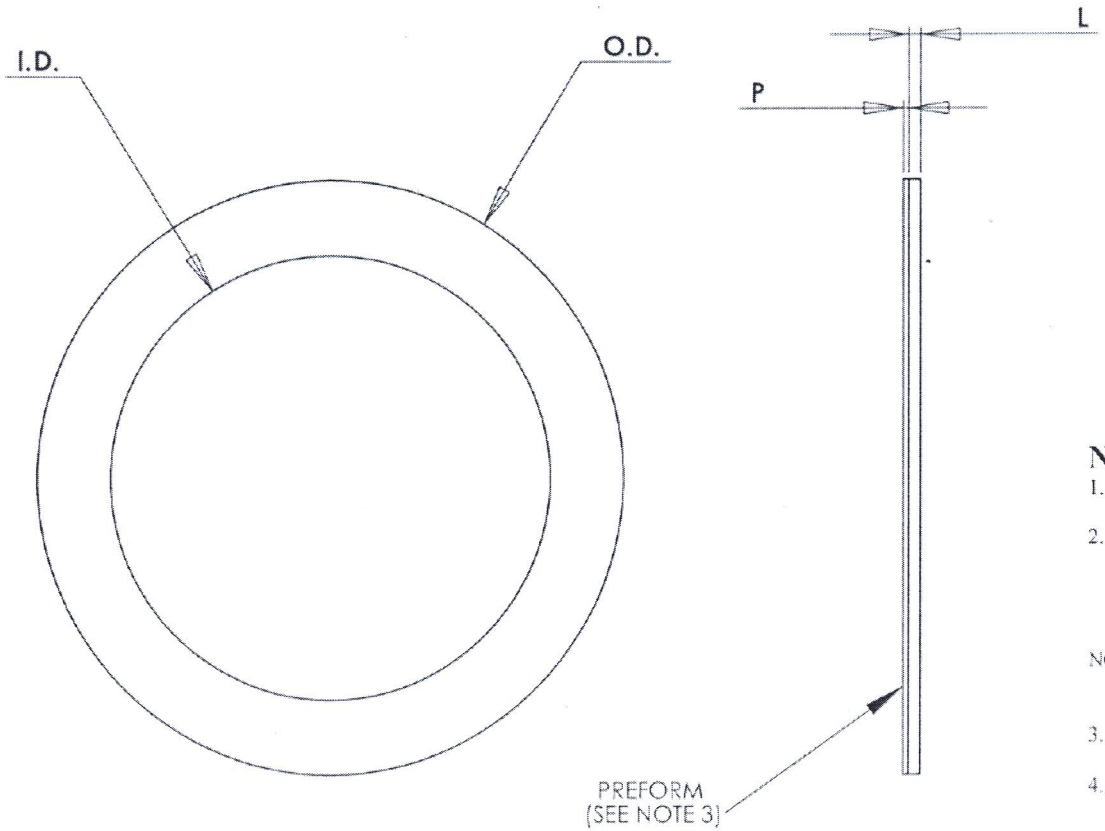

DWG # LCL811D		
DIMENSION		TOLERANCE
O.D.	.811	+/-.003
I.D.	.711	+/-.003
L	.015	+/-.001
P	.0021	+/-.0003

NOTES:

1. LID MATERIAL:KOVAR or ALLOY 42

2. PLATING:
   1st LAYER: 50/350 micro inches Ni

   2nd LAYER: 50 MIN micro inches Au

NOTE: Total Au layer 50 to 225 micro inches
Total Ni layer not to exceed 450 micro inches

3. PREFORM: 80+/- 1% Au 20% Sn

4. FLATNESS: ONE MI (.001) MAX. PER ½" T.I.R.

Chelsea Technology, Inc.

		UNLESS OTHERWISE SPECIFIED:		NAME	DATE
		DIMENSIONS ARE IN INCHES TOLERANCES: FRACTIONAL ± 1/32 ANGULAR: MACH ± 1 Degree TWO PLACE DECIMAL ± .015 THREE PLACE DECIMAL ± .005	DRAWN	F.S.	
			CHECKED	M.D.	
			ENG APPR	M.D.	
			MFG APPR	F.S.	
		MATERIAL --	Q.A.	M.D.	
			COMMENTS		
NEXT ASSY	USED ON	FINISH --			
APPLICATION		DO NOT SCALE DRAWING			

PROPRIETARY AND CONFIDENTIAL
THE INFORMATION CONTAINED IN THIS DRAWING IS THE SOLE PROPERTY OF WILLIAMS ADVANCED MATERIALS. ANY REPRODUCTION IN PART OR AS A WHOLE WITHOUT THE WRITTEN PERMISSION OF WILLIAMS ADVANCED MATERIALS IS PROHIBITED.

Williams ADVANCED MATERIALS

ROUND
FRAME/LID ASSEMBLY

DWG # C-1278-21-50M/50/350NI-T15