A	C	P	REV	DATE	BY	ECN #	REV	DATE	BY	ECN #	REV	DATE	BY	ECN #
–	X	–	A	8-4-00	KM	DR&REL.	A1	8-29-00	KM	00-0345	A2	9-27-00	KM	00-0366

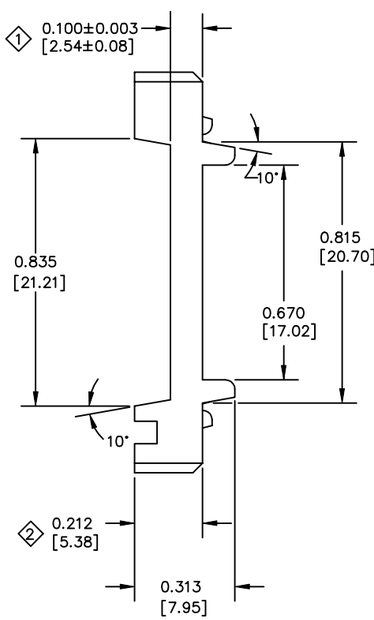

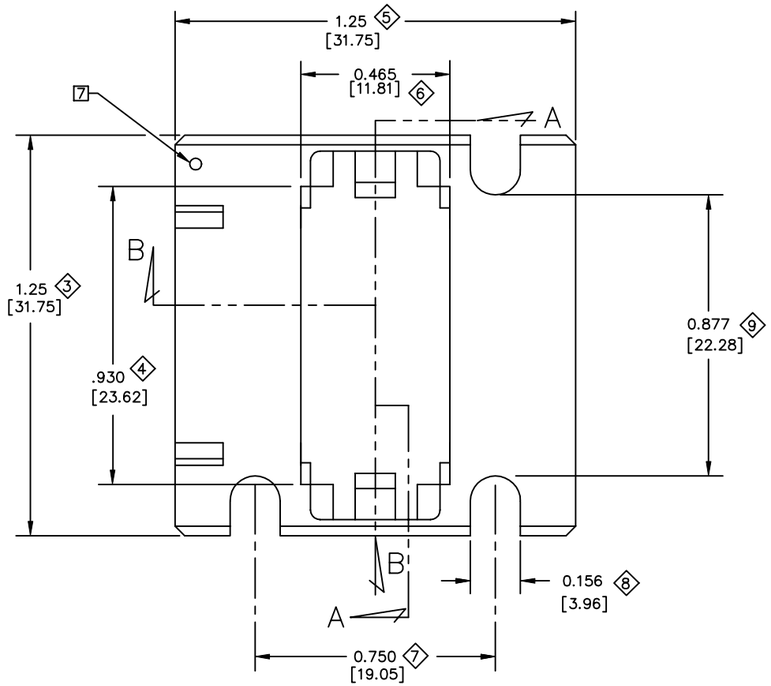

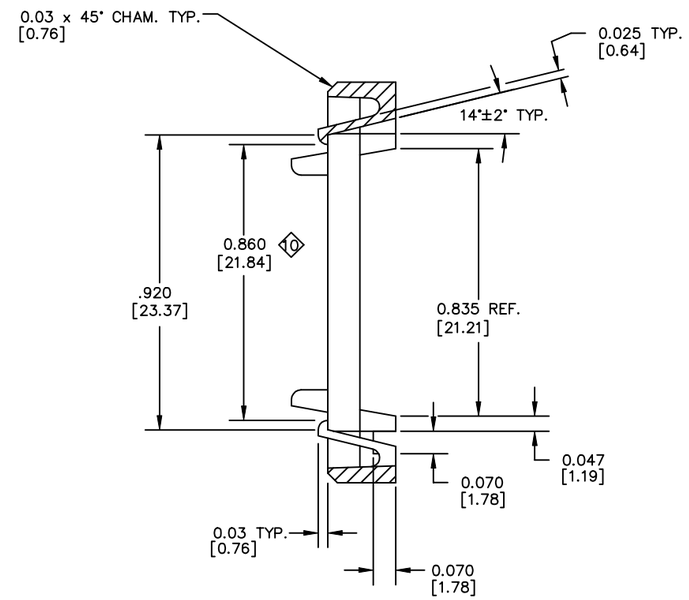

SECTION A–A

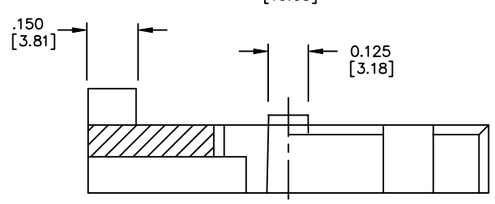

SECTION B–B

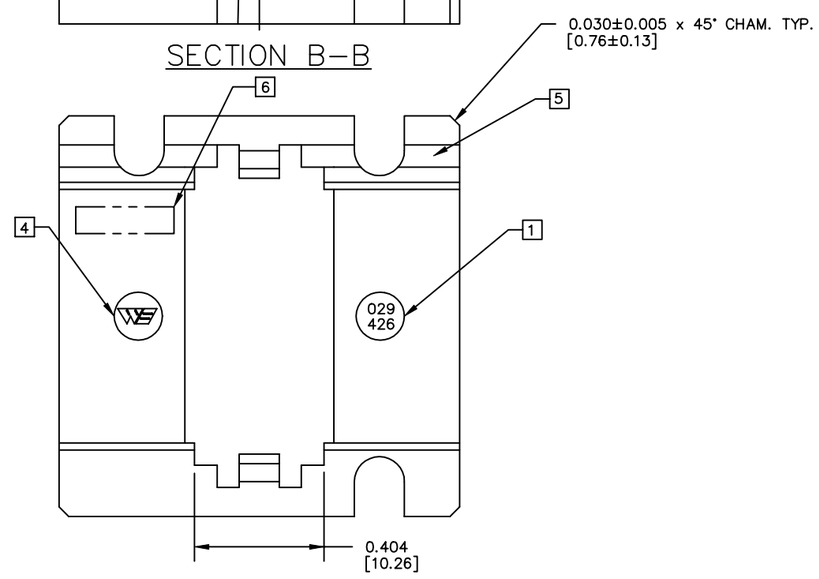

TABLE 1
029–426–0XX

COLOR	MATERIAL 3: 1	2	3	4	5	6	7	8	9
	PSO	PBT	PPS	HI TEMP ESD	ESD	HI TEMP			
0 NAT.	0211								
1 PINK									
2 BLUE									
3 GREEN									
4 BLACK				0297		0283			

7 REVISION LEVEL APPROX. AS SHOWN.
6 PAT. NUMBER 4,435,724 ENGRAVED. APPROX. THIS AREA TO FIT.
5 MULTI–CAVITY MOLDS MUST HAVE ALL CAVITIES IDENTIFIED. LOCATE NUMBERS THIS AREA. SIZE TO FIT.
4 WELLS LOGO .10[2.54] HIGH, RAISED .003[0.08] MAX. LOCATE APPROX AS SHOWN, SET ON .187[4.75] DIA. PIN. (OPTIONAL)
3 MATL'S SHOWN WITHOUT PART NUMBERS ARE FOR REF. ONLY AND REQUIRE ENGINEERING APPROVAL PRIOR TO USE.
2 PARTS TO BE MOLDED IN ACCORDANCE TO WELLS ELECTRONICS SPECIFICATION #QCI–12.
1 PART NUMBER TO BE .05[1.27] HIGH, RAISED .001/.003[0.03/0.08] APPROX. SET ON .187[4.75] DIA. PIN RECESSED .005[0.13] DEEP MAX. LOCATE APPROX. AS SHOWN.

FOR .460 X .920 PACKAGE
[11.68 x 23.37]

CUSTOMER DRAWING

LEGEND	
◇	CRITICAL
10	TOTAL NO. OF ◇ USED

SIZE: D
PROJECTION

THIS DOCUMENT CONTAINS PROPRIETARY INFORMATION THAT IS THE SOLE PROPERTY OF WELLS–CTI. THIS INFORMATION IS TO BE HELD BY ITS RECIPIENT ON A CONFIDENTIAL BASIS, AND IS NOT TO BE DISCLOSED TO OTHERS OR USED WITHOUT WRITTEN CONSENT OF WELLS–CTI.

DO NOT SCALE

MATERIAL/FINISH: SEE TABLE 1
REFERENCE: –
PROJECT/SERIES: 029
TOLERANCES: .XX ±.01 [±0.25] .XXX ±.004 [±0.10] .XXXX ±.0005 ANGLE ±1°

DRAWN	KEN M.	DATE	8–4–00
CHECKED	L.E.P.	DATE	8–9–00
ENGINEER	L.E.P.	DATE	8–9–00
ENG. SUPRV.	L.E.P.	DATE	8–9–00
ENG. SUPRV.	G.A.H.	DATE	8–10–00
ENG. SUPRV.	G.A.H.	DATE	8–10–00

WELLS-CTI
A subsidiary of PCD Inc.
South Bend Indiana USA

PART NAME: 36 LEAD C.L.C.C. 1–PIECE CARRIER
PART NUMBER: 029–426–0XX
REV: A2
SCALE: 4X
UNITS: in [mm]
CAD NUMBER: 029–426–0XX
SHEET 1 OF 1