REV.	DATE	BY	REVISION
B	2-8-92	MH	INC. ECN #92-0162 REVISED & REDRAWN ON CAD
B1	3-16-92	CR	INC. ECN #92-0223 REVISED & REPLOTTED
B2	10-7-95	KW	INC. ECN #95-0608 REVISED & REPLOTTED

REV.	ECN #	REV.	ECN #	REV.	ECN #	REV.	ECN #	REV.	ECN #	REV.	ECN #

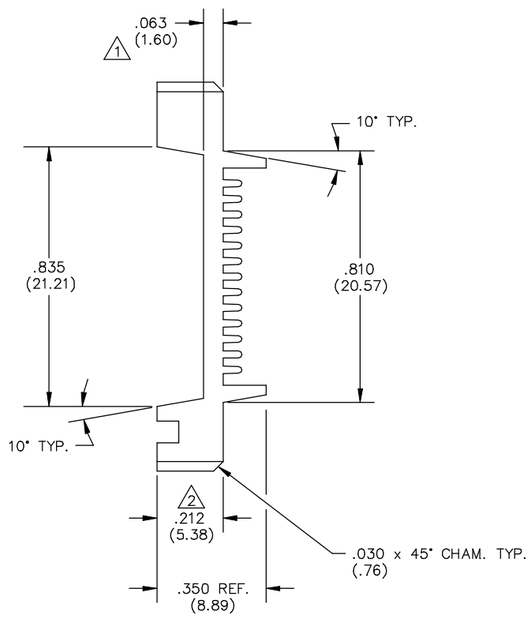

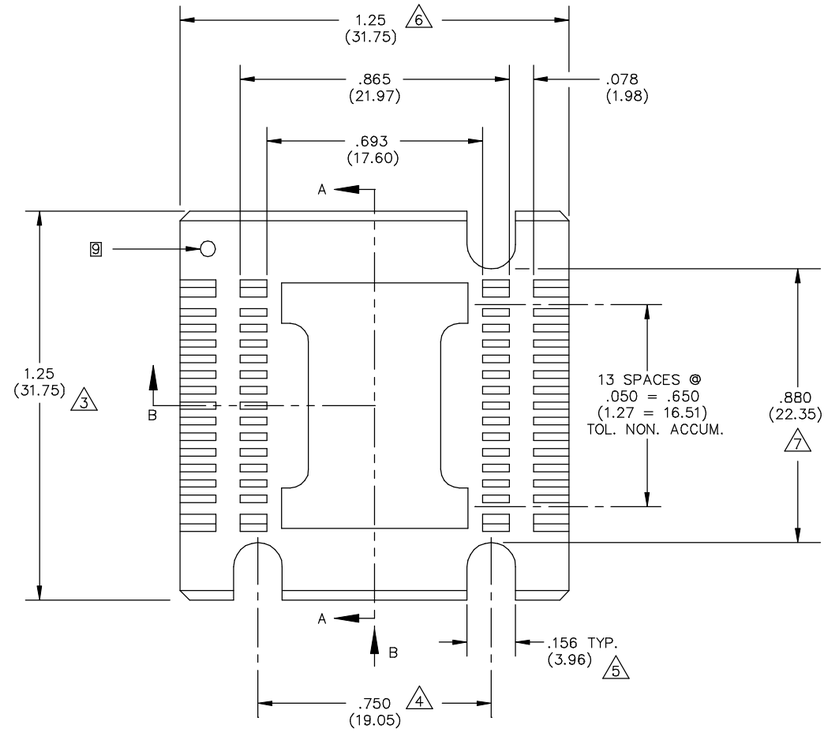

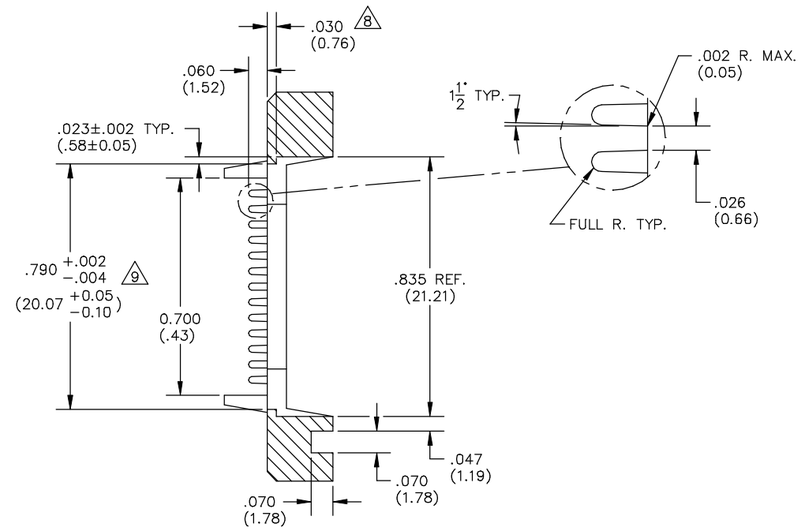

SECTION A–A

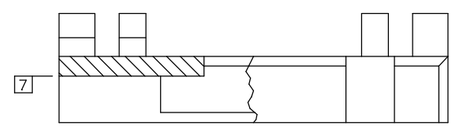

SECTION B–B

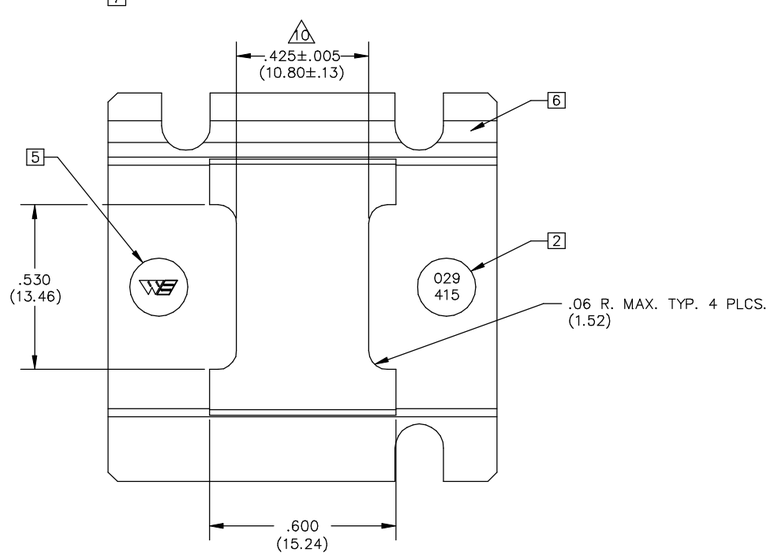

TABLE 1
029–414–0XX

COLOR	MATERIAL 4	1	2	3	4	5	6	7	8	9
		PSO	PBT	PPS	HI TEMP ESD	ESD	HI TEMP			
0	NAT.	0211								
1	PINK						0285			
2	BLUE									
3	GREEN									
4	BLACK				0297	0282				

9 REV. LEVEL PIN THIS AREA, SIZE TO FIT.
8 (X.XX) DENOTES METRIC DIMS. IN MILLIMETERS.
7 .002(.05) MAX. FLASH PERMITTED ON SURFACES SHOWN. (TYP. BOTH ENDS.)
6 ALL CAVITIES MUST BE IDENTIFIED. LOCATE NUMBERS THIS AREA SHOWN, RAISED .002(0.05) HIGH.
5 WELLS LOGO TO BE .10(2.54) HIGH, RAISED .003(.08) MAX., SET ON A .187(4.75) DIA. PIN (OPTIONAL.)LOCATE APPROX. AS SHOWN.
4 MATL'S SHOWN WITHOUT PART NUMBERS ARE FOR REF ONLY AND REQUIRES ENGINEERING APPROVAL PRIOR TO USE.
3 PARTS TO BE MOLDED IN ACCORDANCE TO WELLS SPECIFICATION #QCP–12.
2 PART NUMBER TO BE .05(1.27) HIGH, RAISED .001/.003(.03/.08) (APPROX.), SET ON .187(4.75) DIA. PIN RECESSED .005(.13) MAX LOCATE APPROX. AS SHOWN.
1 USE RETENTION CLIP 039–214–XXX (FOR REF. ONLY.)

NOTES: UNLESS OTHERWISE SPECIFIED

CUSTOMER DRAWING

LEGEND	
◇	CRITICAL
△	MAJOR
ALL OTHERS	MINOR
LAST NUMBER USED WAS : 10	
NUMBERS IN CRITICAL & MAJOR DIMENSIONS ARE RANDOMLY PLACED AND HAVE NO SPECIFIC ORDER IN THE WAY THAT THEY HAVE BEEN NUMBERED.	

THIS DOCUMENT CONTAINS PROPRIETARY DESIGNS, SPECIFICATIONS, DATA, INFORMATION AND TECHNICAL MATERIAL THAT ARE THE SOLE PROPERTY OF WELLS ELECTRONIC, INC. THIS INFORMATION IS TO BE HELD AND TREATED BY ITS RECIPIENT ON A CONFIDENTIAL BASIS, AND IS NOT TO BE SHOWN OR DISCLOSED TO THIRD PARTIES WITHOUT THE WRITTEN CONSENT OF WELLS ELECTRONICS, INC. THIS DATA DOES NOT CONVEY MANUFACTURING RIGHTS TO ANY ITEM SHOWN.

ITEM	PART NUMBER	QTY	DESCRIPTION

MATERIAL: SEE TABLE 1
FINISH:
DO NOT SCALE
TOLERANCES
.XX ±.01(±0.25)
.XXX ±.006(±0.15)
.XXXX – – – – –
ANGLE ±1°

DRAWN	HOHULIN	DATE	2–8–92
CHECKED	–	DATE	–
PROJ. ENG.	F.N.	DATE	2–10–92
CHIEF ENG.	T.L.	DATE	2–13–92
MFG. ENG.	–	DATE	–
QUALITY	–	DATE	–

WELLS ELECTRONICS
SOUTH BEND, INDIANA

PART NAME: 28 LEAD FLATPACK CARRIER
PART NO.: 029–415–0XX REV. B2
SCALE: 4X
SHEET:
CAD DWG NO.: 029–415C
SUB-DIR ON SERVER: CARRIERC

A – C X – P – PART NO. 029–415–0XX