REV.	DATE	BY	REVISION
C1	3-31-92	CR	INC. ECN. #92-0246 REDRAWN ON CAD.

REV.	ECN #	REV.	ECN #	REV.	ECN #	REV.	ECN #	REV.	ECN #	REV.	ECN #

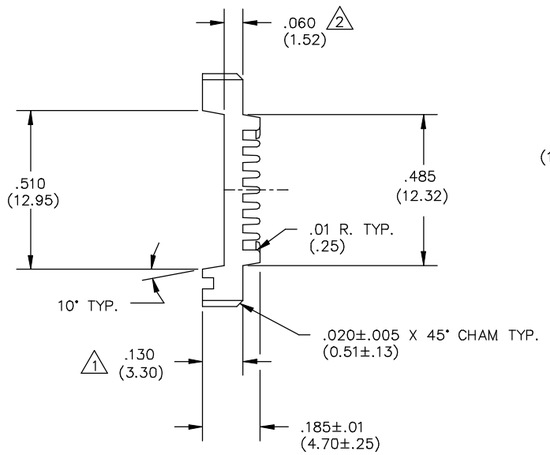

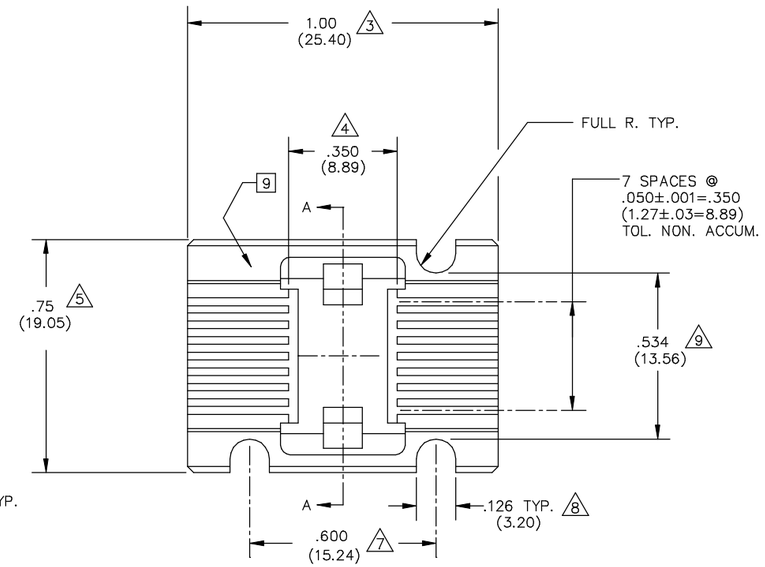

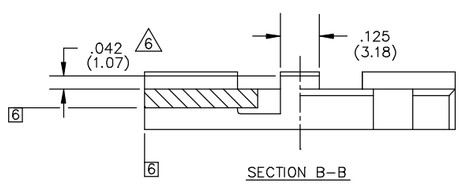

SECTION B–B

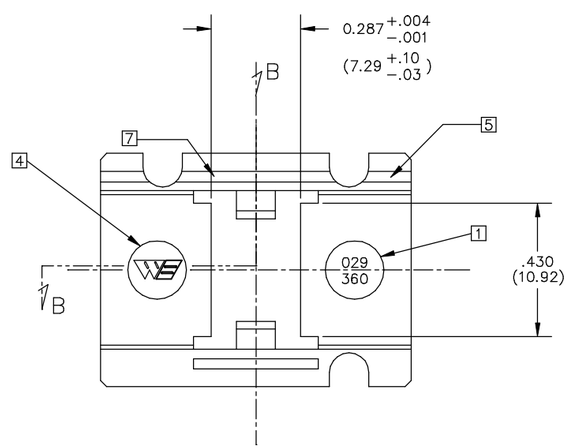

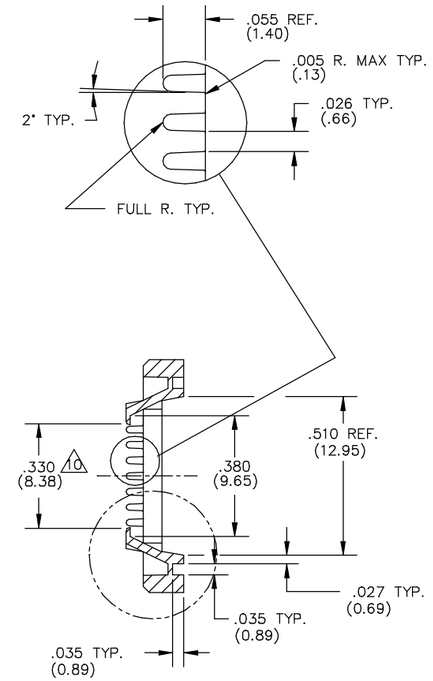

SECTION A–A

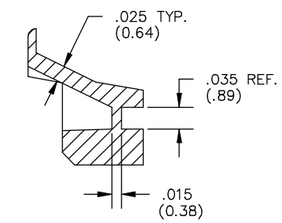

LATCH DETAIL

TABLE 1
029–360–0XX

	MATERIAL 3								
	1	2	3	4	5	6	7	8	9
COLOR	PSO	PBT	PPS	HI TEMP ESD	ESD	HI TEMP			
0 NAT.	0211								
1 PINK			—	—	—	0285			
2 BLUE			—		—				
3 GREEN			—	—	—				
4 BLACK			—	0297	0282				

A	C	P	PART NO.
–	X	–	029–360–0XX

9 REVISION LETTER TO APPEAR APPROX. THIS SURFACE.
8 (XX.XX) DENOTES METRIC DIM'S IN MILLIMETERS.
7 PAT. NO. 4,435,724 ENGRAVED THIS AREA .002 (.05) DEEP.
6 .002 (.05) MAX. FLASH PERMITTED THESE SURFACES (TYP. BOTH ENDS)
5 MULTI–CAVITY MOLDS MUST HAVE CAVITIES IDENTIFIED. LOCATE NUMBERS THIS AREA. SIZE TO FIT.
4 WELLS LOGO(WE) .05 (1.27) HIGH RAISED .003 (.08) MAX. LOCATE APPROX. AS SHOWN. SET ON .15 (3.81) DIA. PIN OPTIONAL.
3 MATL'S SHOWN WITHOUT PART NUMBERS ARE FOR REF. ONLY AND REQUIRE ENGINEERING APPROVAL PRIOR TO USE.
2 PARTS TO BE MOLDED IN ACCORDANCE TO WELLS ELECTRONICS SPECIFICATION #QCP–12.
1 PART NUMBER TO BE .05 (1.27) HIGH RAISED .001/.003 (.03/.08) APPROX. SET ON .15 (3.81) DIA. PIN RECESSED .005 (.13) DP. MAX. LOCATE APPROX. AS SHOWN.

NOTES: UNLESS OTHERWISE SPECIFIED

CUSTOMER DRAWING

LEGEND	
◇	CRITICAL
△	MAJOR
ALL OTHERS	MINOR
LAST NUMBER USED WAS : 10	
NUMBERS IN CRITICAL & MAJOR DIMENSIONS ARE RANDOMLY PLACED AND HAVE NO SPECIFIC ORDER IN THE WAY THAT THEY HAVE BEEN NUMBERED.	

ITEM	PART NUMBER	QTY

THIS DOCUMENT CONTAINS PROPRIETARY DESIGNS, SPECIFICATIONS, DATA, INFORMATION AND TECHNICAL MATERIAL THAT ARE THE SOLE PROPERTY OF WELLS ELECTRONIC, INC. THIS INFORMATION IS TO BE HELD AND TREATED BY ITS RECIPIENT ON A CONFIDENTIAL BASIS, AND IS NOT TO BE SHOWN OR DISCLOSED TO THIRD PARTIES WITHOUT THE WRITTEN CONSENT OF WELLS ELECTRONICS, INC. THIS DATA DOES NOT CONVEY MANUFACTURING RIGHTS TO ANY ITEM SHOWN.

MATERIAL: SEE TABLE 1
FINISH:
DO NOT SCALE
TOLERANCES
.XX ±.01(±0.25)
.XXX ±.005(±.13)
.XXXX ––––––––
ANGLE ±1°

DRAWN C RESKE	DATE 3–31–92	DESCRIPTION	WELLS ELECTRONICS SOUTH BEND, INDIANA
CHECKED KEN M.	DATE 4–7–92	PART NAME	16 LEAD ONE PIECE CARRIER
PROJ. ENG. RALSTIN	DATE 4–7–92	PART NO.	029–360–0XX REV. C1
CHIEF ENG.	DATE	SCALE	4X
MFG. ENG. —	DATE —	SHEET	
QUALITY —	DATE —	CAD DWG NO.	029–360C
		SUB-DIR ON SERVER	CARRIERC\