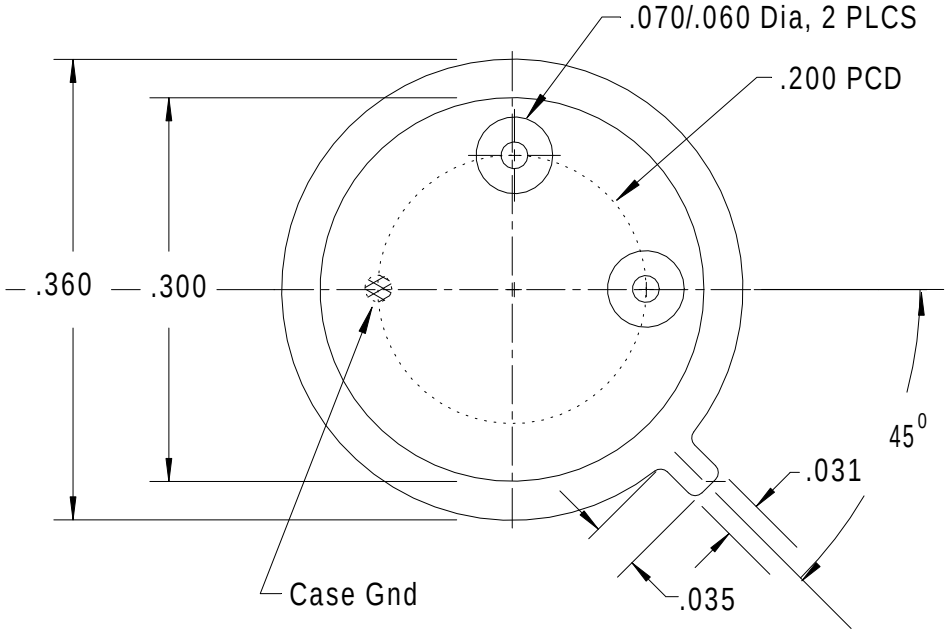

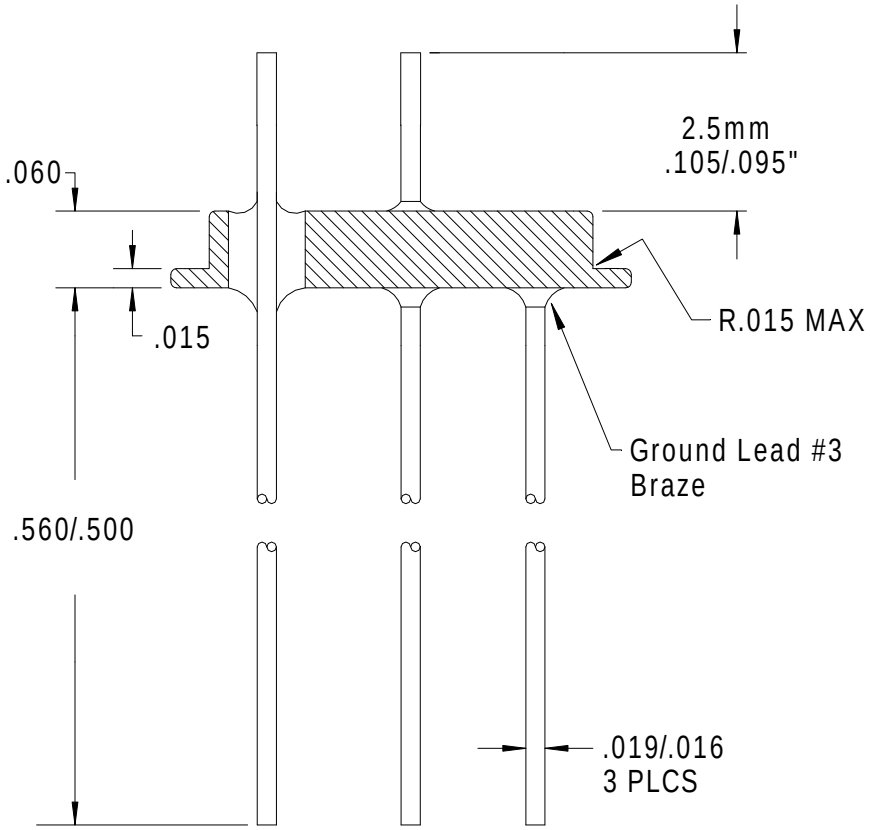

DASH#	Gold Plate	Nickel Plate
-10	10u" AU	100-300 SuNi
-20	20u" AU	100-300 SuNi
-24	24u" AU	157-236 ENi
-25	25u" AU	100-300 SuNi
-30	30u" AU	100-300 SuNi
-40	40u" AU	100-300 SuNi
-50	50u" AU	100-300 SuNi
-EN		75-150 ENi

REVISION RECORD		
A	ORIGINAL	4.13.04
B	add plating table	12.10.14

MATERIAL:
BODY: Kovar
PINS: KOVAR
GLASS: Matched

FINISH: PER SPEC.

TOLERANCES
.XX ± .02
.XXX ± .005
ANGLES
±1/2 DEG

DR.
DATE4.13.04
SCALE
CK
APPR

ELECTRONIC PRODUCTS, INC.
NEWBURYPORT, MA.

TO-39, 3 LEADS, 2+1, .100 (2.5mm) post

PART NO. 01039-124-plating

REV. B