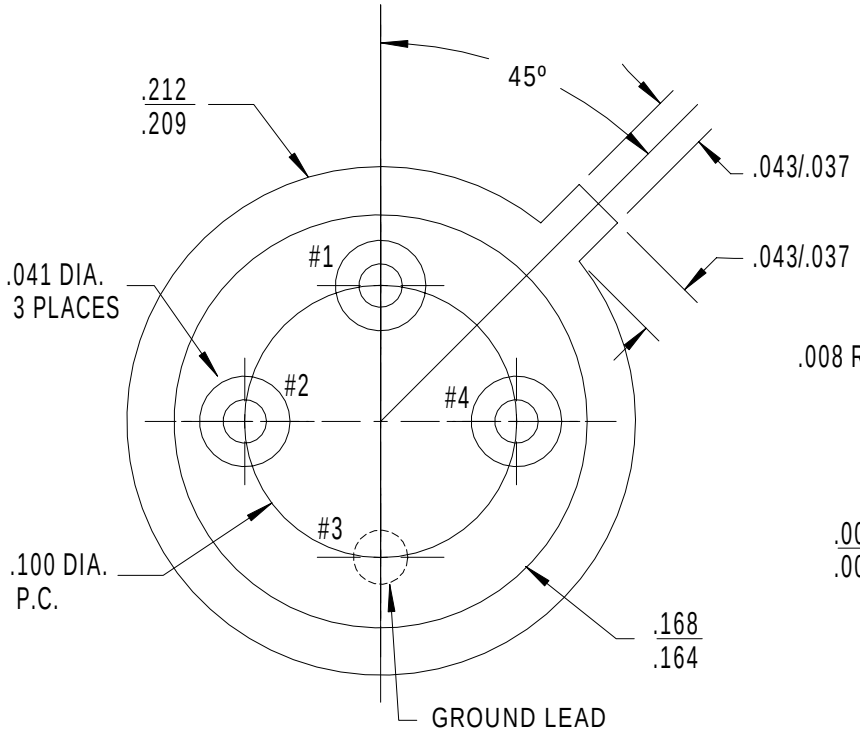

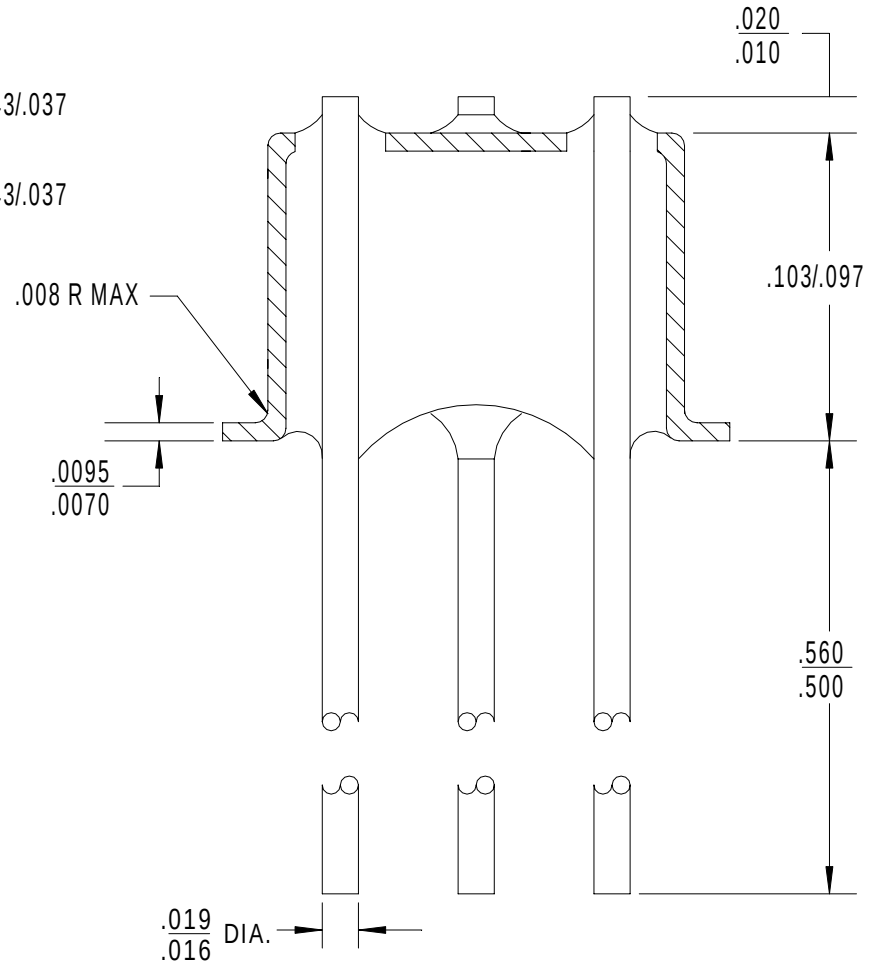

NOTES:

REVISION RECORD		
A	ISSUE	1.24.02

MATERIAL: BODY:KOVAR ASTM F-15
LEADS: KOVAR
GLASS: MATCHED

FINISH:

TOLERANCES
.XX ± .02
.XXX ± .003
ANGLES
±1/2 DEG

DR. JWP
DATE 1.24.02
SCALE
CK
APPR

ELECTRONIC PRODUCTS, INC.
NEWBURYPORT, MA.
TELE:978-462-8101 FAX:978-462-4071

TITLE TO18, 3+1, .500" LEADS, #3 Gnd.

PART NO. 01018-052

REV. A